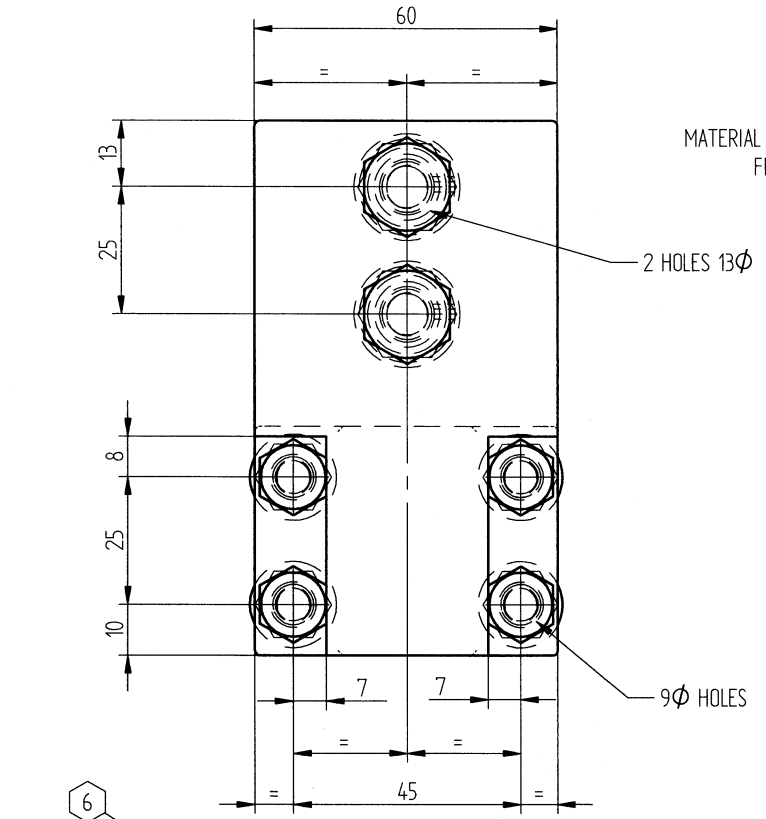

NOTES
MATERIAL :- BRASS STAMPING / EXTRUSION
FINISH :- ELECTRO TINNED

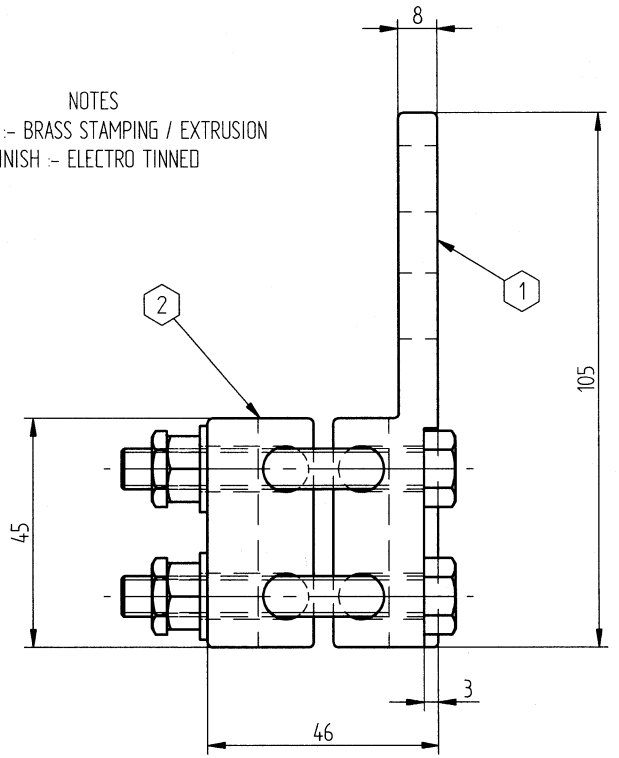

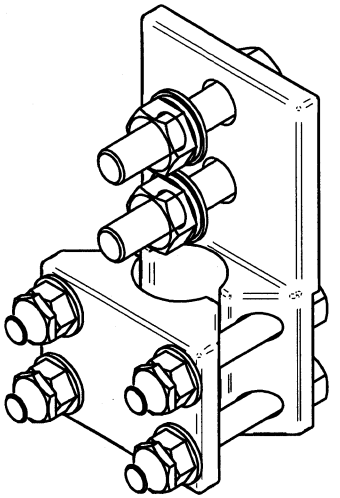

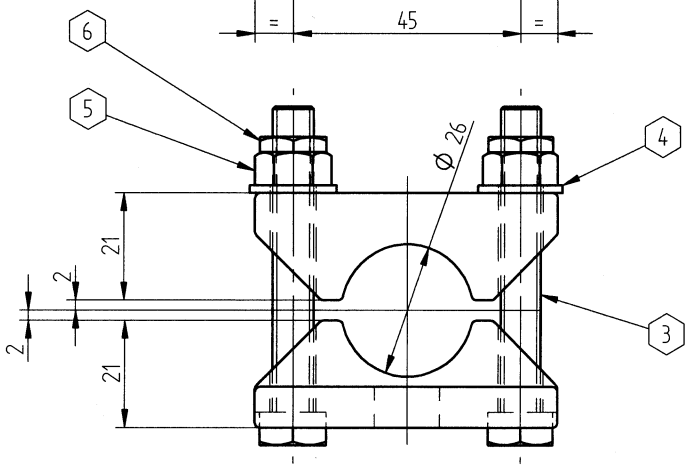

Item No	Part No	Quantity	Desription	Material
1	BLK0011-1	1	Block connector	Brass
2	BLK0011-2	1	Block connector	Brass
3	M8 X 60	4	Setscrew	Zinc plated
4	M8 P/W	4	Plain washer	Zinc plated
5	M8 F/N	4	Full nut	Zinc plated
6	M8 L/N	4	Lock nut	Zinc plated
7	M10 x 50	2	Setscrew	Zinc plated
8	M10 P/W	2	Plain washer	Zinc plated
9	M10 S/W	2	Spring washer	Zinc plated
10	M10 F/N	2	Full nut	Zinc plated

	NAME	DATE
DRAWN	DSF	16/07/10
ENG APPR		

UNLESS OTHERWISE SPECIFIED
DIMENSIONS ARE IN MILLIMETERS

BTRAC LTD

BRITISH TRANSFORMER COMPONENTS

TITLE: M3 TERMINAL CONNECTOR FOR 185mm CABLES

TOLERANCES UNLESS OTHERWISE STATED
UN-MACHINED CASTINGS +-2
UN-MACHINED STAMPINGS +-1
CUT-OFF LENGTHS +-1
MACHINED DIMENSIONS +-0.2
FABRICATION DIMENSIONS +-3

SIZE: A3 | DWG NO: BLK0011 | REV: 1

FILE NAME: BLK0011.dft

SCALE: 1:1 | WEIGHT: TBA

REVISION NOTES

1/ CONNECTION M10 FITTINGS ADDED TO PARTS LIST DSF 31/05/2011

etech components All Enquiries: tel: +44 (0)1744 762 929 | email: sales@etechcomponents.com | web: www.etechcomponents.com